Masterbuilt Manufacturing, Inc.
1 Masterbuilt Court
Columbus, Georgia 31907
Customer Service 1-800-489-1581

Manual Code: 98041000009 07302010-14SS

ASSEMBLY, CARE & USE MANUAL
WARNING & SAFETY INFORMATION
MODEL: 20040111, 20042511, 20041711
14” PORTABLE KETTLE CHARCOAL GRILL
THIS PRODUCT IS FOR OUTDOOR USE ONLY

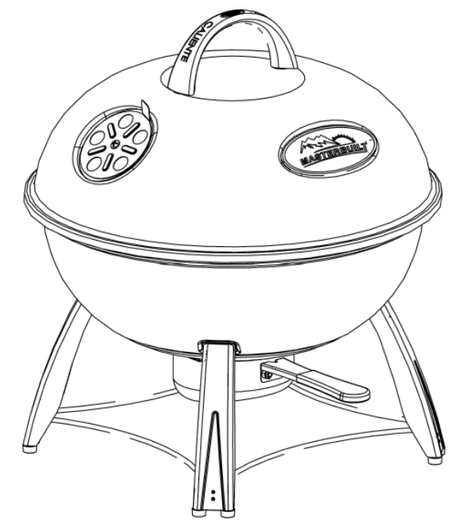

Approximate assembly time: 15 minutes.

Tools required for assembly: Adjustable Wrench, Phillips Head Screwdriver.

CARBON MONOXIDE HAZARD	WARNING
Burning charcoal gives off carbon monoxide, which has no odor and can cause death. DO NOT burn charcoal inside homes, vehicles, tents, garages or any enclosed areas. Use only outdoors where it is well ventilated.	This manual contains important information necessary for the proper and safe use of this grill. Read and follow all warnings and instructions before using grill and during use. Keep this manual for future reference.
Failure to follow these warnings and instructions properly could result in fire or explosion, which could cause property damage, personal injury, or death.	

GENERAL WARNING AND SAFETY INFORMATION

- **Keep a fire extinguisher accessible at all times while operating grill.**
- **Never leave grill unattended while in use.**
- **Never use inside an enclosed area such as a patio, garage, building or tent.**
- **Never use inside a vehicle, not even a recreational vehicle such as a motor home, camper or truck bed.**
- **Never operate this grill under any overhead construction such as roof coverings, carports, awnings or overhangs.**
- **Maintain a minimum distance of 10 feet from all structures.**
- **Keep area clear of all combustible materials such as wood, dry plants, grass, brush, paper or canvas.**
- **Never operate this grill within 25 feet of flammable liquids.**
- **Never operate this grill within 10 feet of a gas cylinder.**
- **Never use this grill as a heater (READ CARBON MONOXIDE HAZARD).**
- **Use this grill only on a stable, level surface to prevent tipping.**
- **Use on non-combustible surfaces such as dirt, concrete, brick or rock.**
- **Keep children and pets away from grill at all times. Do not allow children to use grill.**
- **Only use charcoal lighting fluid. Never use gasoline, alcohol or other highly volatile fluids to ignite charcoal. These fluids can explode causing injury or death.**
- **Grill is HOT while in use and will remain HOT for a period of time afterwards. Do not touch any part of the grill without wearing protective gloves.**
- **Never move grill when in use. Allow grill to cool completely before moving or storing.**
- **Never leave HOT coals or ashes unattended.**
- **Do not store grill with HOT ashes or charcoal inside grill. Store only when fire is completely out and all surfaces are cold.**
- **Dispose of cold ashes by placing them in aluminum foil, soaking with water and discarding in a non-combustible container.**
- **Accessory attachments not supplied by Masterbuilt Manufacturing, Inc. are not recommended.**
- **Never use this product for anything other than its intended purpose. This grill is not for commercial use.**
- **Always use this grill in accordance with all applicable local, state and federal fire codes.**

WARNING

Combustion by-product produced when using this product contains chemicals known to the State of California to cause birth defects, other reproductive harm, or cancer.

The materials used in this product may contain lead a chemical known to the State of California to cause birth defects and other reproductive harm.

WARNING

To ensure that it is safe to eat, food must be cooked to the minimum internal temperatures listed in the table below.

USDA* Safe Minimum Internal Temperatures	
Fish	145° F
Pork	160° F
Egg Dishes	160° F
Steaks and Roasts of Beef, Veal or Lamb	145° F
Ground Beef, Veal or Lamb	160° F
Whole Poultry (Turkey, Chicken, Duck, etc.)	165° F
Ground or Pieces Poultry (Chicken Breast, etc.)	165° F

*** United States Department of Agriculture**

LIMITED WARRANTY INFORMATION

Masterbuilt warrants its products to be free from defects in material and workmanship under proper assembly, normal use and recommended care for 90 days from the date of original retail purchase.

Masterbuilt warranty does not cover paint finish as it may burn off during normal use.

Masterbuilt warranty does not cover rust of the unit.

Masterbuilt requires reasonable proof of purchase for warranty claims and suggests that you keep your receipt. Upon the expiration of such warranty, all such liability shall terminate.

Within the stated warranty period, Masterbuilt, at its discretion, shall repair or replace defective components free of charge with owner being responsible for shipping. Should Masterbuilt require return of component(s) in question for inspection Masterbuilt will be responsible for shipping charges to return requested item.

This warranty excludes property damage sustained due to misuse, abuse, accident, damage arising out of transportation, or damage incurred by commercial use of this product.

This expressed warranty is the sole warranty given by Masterbuilt and is in lieu of all other warranties, expressed or implied including implied warranty, merchantability, or fitness for a particular purpose.

Neither Masterbuilt nor the retail establishment selling this product, has authority to make any warranties or to promise remedies in addition to or inconsistent with those stated above.

Masterbuilt's maximum liability, in any event, shall not exceed the purchase price of the product paid by the original consumer/ purchaser. Some states do not allow the exclusion or limitation of incidental or consequential damages. In such a case, the above limitations or exclusions may not be applicable.

California residents only: Not withstanding this limitation of warranty, the following specific restrictions apply; if service, repair, or replacement of the product is not commercially practical, the retailer selling the product or Masterbuilt will refund the purchase price paid for the product, less the amount directly attributable to use by the original buyer prior to the discovery of the nonconformity. Owner may take the product to the retail establishment selling this product in order to obtain performance under warranty.

This expressed warranty gives you specific legal rights, and you may also have other rights which vary from state to state.

Go Online www.masterbuilt.com
or complete and return to
Attn: Warranty Registration
Masterbuilt Mfg. Inc.
1 Masterbuilt Court - Columbus, GA 31907

Name: _____

Address: _____

City, State/Province, Postal Code: _____

Phone Number: _____ E-Mail Address: _____

Model Number: _____ Serial Number: _____

Purchase Date: _____ Place of Purchase: _____

APPROXIMATE GRILLING TIMES

BEEF	SIZE	GRILLING TIME	INTERNAL TEMP
Steaks	¾" thick	3 to 4 min. /side	med rare 145°F
		4 to 5 min. /side	med 160°F
Kabobs	1" cubes	3 to 4 min. /side	145°F to 160°F
Hamburger patties	½" thick	3 to 4 min. /side	med 160°F
Roast, rolled rump	4 to 6 lbs.	18 to 22 min /lb.	145°F to 160°F
Sirloin tip	3 ½ to 4 lbs.	20 to 25 min. /lb.	145°F to 160°F
Ribs, back	cut in 1-rib portions	10 min. /side	med 160°F
	half, 2 to 3 lbs.	10 to 12 min. /side	med rare 145°F
Tenderloin	whole, 4 to 6 lbs.	12 to 15 min. /side	med 160°F
PORK	**SIZE**	**GRILLING TIME**	**INTERNAL TEMP**
Chops, bone-in	¾" thick	3 to 4 min. /side	med 160°F
Chops, bone-out	1 ½" thick	7 to 8 min. /side	med 160°F
Tenderloin	½" to 1 ½" lbs.	15 to 25 min. total	med 160°F
Ribs (indirect heat)	2 to 4 lbs.	1 1/2 to 2 hrs.	med 160°F
VENISON	**SIZE**	**GRILLING TIME**	**INTERNAL TEMP**
Roast, saddle or leg	6 to 7 lbs.	25 to 30 min. /lb.	145°F to 160°F
Steaks	¾" thick	6 to 7 min. /side	med 160°F
CHICKEN	**SIZE**	**GRILLING TIME**	**INTERNAL TEMP**
Broiler fryer (indirect heat)	3 to 4 lbs.	60 to 75 min.	in thigh 180°F
Cornish hens	18 to 24 oz.	45 to 55 min.	in thigh 180°F
Breast halves, bone-in	6 to 8 oz. each	10 to 15 min. /side	170°F
Breast halves, boneless	4 oz. each	6 to 8 min. /side	170°F
Legs or thighs	4 to 8 oz.	10 to 15 min. /side	180°F
Drumsticks	4 oz.	8 to 12 min. /side	180°F
Wings	2 to 3 oz.	8 to 12 min. /side	180°F

- When outside temperature is cooler than 65°F and/or altitude is above 3,500 feet, additional cooking time may be required. To insure that meat is completely cooked use a meat thermometer to test internal temperature.

- Lifting grill lid during cooking process may extend cooking time due to heat loss.

PARTS LIST

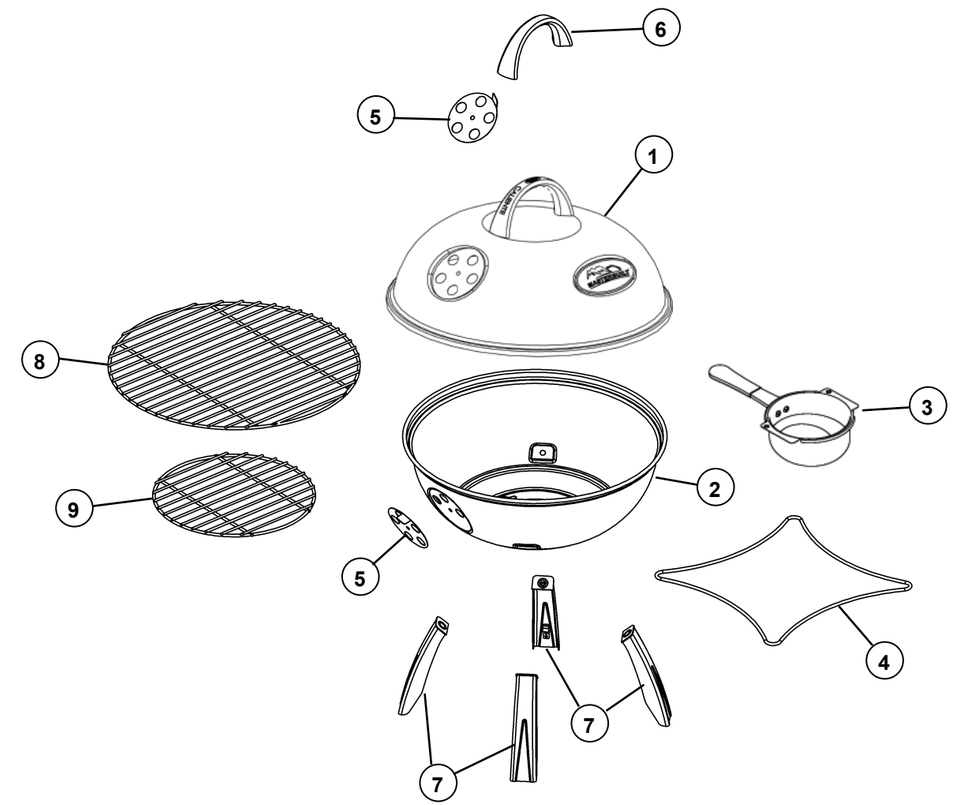

ITEM NO.	QUANTITY	DESCRIPTION	ITEM NO.	QUANTITY	DESCRIPTION
1	1	Kettle Lid	6	1	Kettle Lid Handle
2	1	Kettle Base	7	4	Kettle Base Legs
3	1	Ash Can	8	1	Cooking Grate
4	1	Leg Support Frame	9	1	Charcoal Grate
5	2	Air Dampers			

HARDWARE LIST

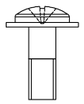

(A)
1/4-20x1/2”
Phillips Head Screw
qty-4

(B)
3/16-24x3/8”
Phillips Head Screw
qty-2

(C)
3/16”
Nylon Hex Lock Nut
qty-2

(D)
1/4”
Serrated Flange Nut
qty-2

(E)
1/4”
Aluminum Flat Washer
qty-6

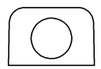

(F)
Heat Insulation Washer
qty-4

(G)
Round Heat Insulation
Washer
qty-2

REPLACEMENT PARTS LIST			
MODEL# 20040111	MODEL# 20042511	MODEL# 20041711	DESCRIPTION
PART NUMBER			
990060178	990060178	990060178	Kettle Leg Kit
9904090009	9904090009	9904100014	Kettle Lid Kit
990060270	990060270	990060270	Kettle Base Kit
906060118	906060118	906060118	Ash Can
906060116	906060116	906060116	Leg Support Frame
9904090010	9904090010	9904090010	Lid Handle Kit
990060182	990060182	990060182	Air Damper Kit
9904100015	9904090011	NA	Logo Plate Kit
906060112	906060112	906060112	Cooking Grate
906060113	906060113	906060113	Charcoal Grate
9804100005	9804100005	9804100005	Instruction Manual
998060014	998060014	998060014	Hardware Kit

STOP!

DO NOT RETURN TO RETAILER
For Assembly Assistance, Missing or Damaged Parts
Call: MASTERBUILT Customer Service at 1-800-489-1581

SAFE STORAGE AND MAINTENANCE

- Inspect hardware in assembled parts on a regular basis to insure grill is in safe working condition.
- ALWAYS allow grill to cool completely before handling.
- ALWAYS empty ash can after use only when ashes have completely cooled. This will help prolong ash can life.
- Clean grill, including special surfaces such as cooking grates with mild cleaning agents. Wipe outside of grill with damp rag. DO NOT use oven cleaner.
- ALWAYS cover and store cold grill in a protected area.
- Indoor storage of grill is permissible only if the charcoal has burned to a complete ash AND is cold. Remember to remove cold ashes before storing.
- Grill is made of steel and may rust over time. If rusting occurs on outside surfaces, clean area with sand paper or steel wool, then cover with heat resistant paint.
- If rusting occurs on the inside surface of grill, clean area with sandpaper or steel wool, then coat with cooking oil.
- NEVER USE PAINT ON INSIDE SURFACES OF GRILL

CHARCOAL LIGHTING INSTRUCTIONS

Read all instructions and warnings on charcoal bag and in manual before using.

1. Stack briquets in a pyramid.
2. Add lighter fluid following directions on fluid container. Before lighting, place lighter fluid at least 25 feet away from grill. Do not lean over grill when lighting charcoal. Light charcoal. LEAVE GRILL UNCOVERED.
3. In about 15 minutes, flames will die out and briquets will begin to ash over. Once the briquets are completely ashed over, spread briquets in a single layer and begin cooking.

- **NEVER USE GASOLINE TO LIGHT CHARCOAL.**
- **OVERFILLING CHARCOAL GRATE CAN CAUSE SERIOUS INJURY AND DAMAGE THE UNIT.**
- **NEVER ADD ADDITIONAL LIGHTER FLUID ONCE CHARCOAL HAS IGNITED.**
- **HOT COALS SHOULD NOT BE LEFT UNATTENDED.**
- **GRILL IS HOT. USE PROTECTIVE GLOVES AND LONG, STURDY COOKING UTENSILS.**

GRILL OPERATION CAUTIONS

- Avoid bumping or impacting grill.
- Keep your hands, hair and face away from burning charcoal.
- This grill has an open flame. Be careful of loose hair and clothing during operation. They may catch fire.
- Use protective gloves when handling this grill or working with fire. Use protective gloves or long, sturdy fireplace tools when adding wood or charcoal.
- Do not allow anyone to conduct activities around this grill during or following its use until the unit has cooled. This grill is HOT during operation and remains HOT for a period of time following its use.
- Fatty foods like hamburgers can have excess grease that can cause flare ups. When cooking fatty foods, use caution when opening lid and during cooking to avoid being burned.
- Be careful when removing food from grill. All surfaces are HOT and may cause burns. Use protective gloves or long, sturdy cooking tools.
- Never use glass, plastic or ceramic cookware on this grill.
- The use of alcohol, prescription or non-prescription drugs may impair the user's ability to properly assemble or safely operate this grill.
- Grill lid and base are HOT while in use and during cooling process.
- Do not remove ash can while ashes and charcoal are HOT.
- Air dampers are HOT while the grill is in use and during cooling; wear protective gloves when adjusting.
- Never overfill charcoal grate. This can cause serious injury as well as damage the unit.
- Only use charcoal lighting fluid, never use gasoline, alcohol or other highly volatile fluids to ignite the charcoal. These fluids can explode causing injury or death.

REMINDER:
NEVER OPERATE THIS GRILL UNDER ANY OVERHEAD CONSTRUCTION. MAINTAIN A MINIMUM DISTANCE OF 10 FEET FROM OVERHEAD CONSTRUCTION, WALLS OR RAILS. SEE DIAGRAM BELOW.

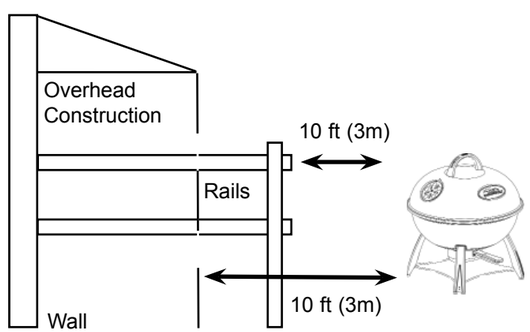

Before assembly read instructions carefully.

Tools needed for assembly:

Adjustable Wrench
Phillips Head Screwdriver

Assemble grill on a clean, flat surface.

Do not tighten screws all the way. Legs may need to be adjusted when leg support frame is attached in STEP 2.

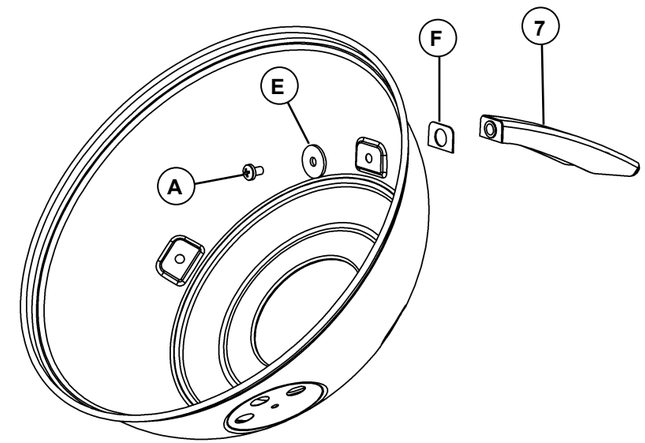

STEP 1.

Place heat insulation washers (F) on leg (7) as shown. Secure with aluminum flat washers (E) and phillips head screws (A).

Repeat step with remaining legs.

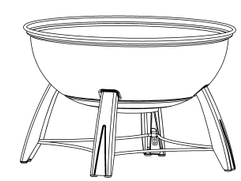

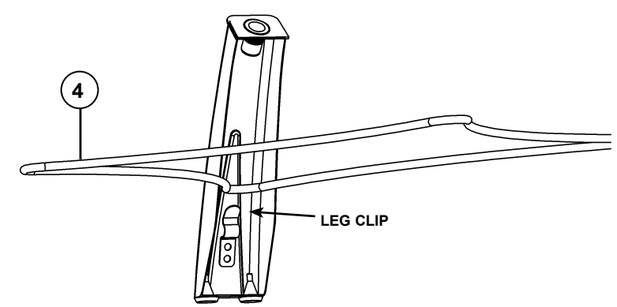

STEP 2.

Note: Leg support frame may require tilting to place in position.

Note: Legs may need to be spread apart to place leg support frame in position.

Position corners of leg support frame (4) inside legs above clips as shown. Press leg support frame down firmly into clips to secure.

Tighten all leg hardware.

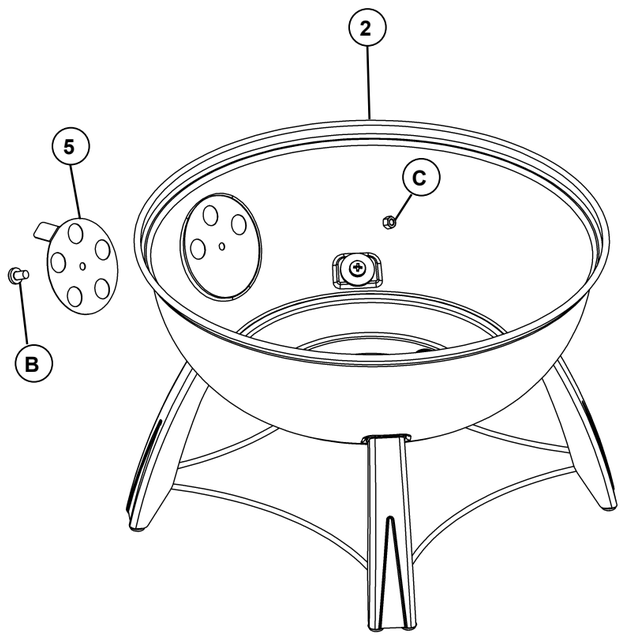

STEP 3.

Note: Do not over tighten. Damper should move freely.

Attach air damper (5) to kettle base (2) using phillips head screw (B) and nylon hex lock nut (C) as shown.

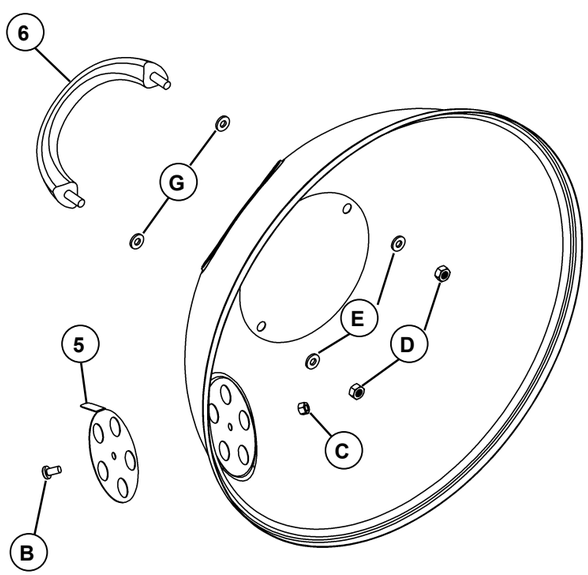

STEP 4a.

Place heat insulation washers (G) on lid handle (6) as shown. Insert handle screws into holes in kettle lid. Add aluminum flat washers (E) and secure with serrated flange nuts (D).

STEP 4b.

Note: Do not over tighten. Damper should move freely.

Attach lid air damper (5) to kettle lid using phillips head screw (B) and hex lock nut (C).

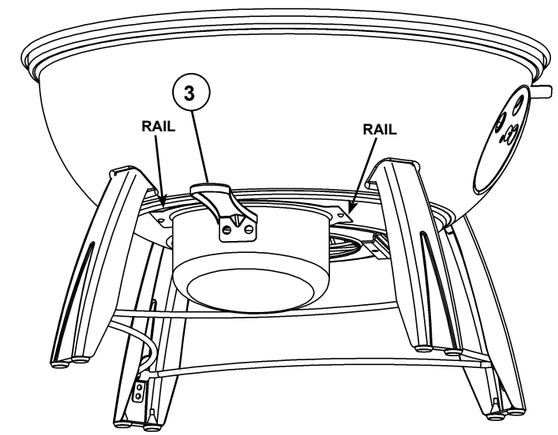

STEP 5.

Slide ash can (3) onto rails on bottom of kettle base as shown.

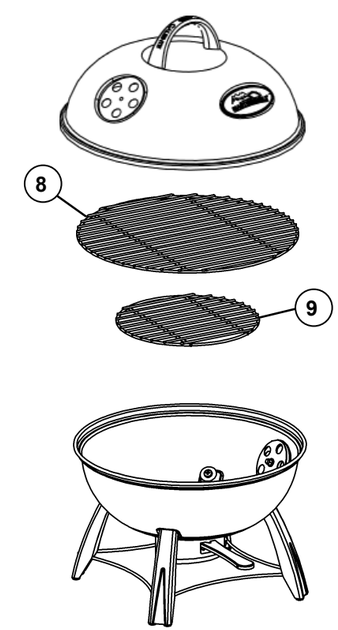

STEP 6.

Place charcoal grate (9) and cooking grate (8) in kettle base as shown.

GRILL IS READY FOR USE.