Masterbuilt Manufacturing Inc.
1 Masterbuilt Court
Columbus, GA 31907
Customer Service 1-800-489-1581

Manual Code: 988060022 090415

HITCH-HAUL® SIDE RAIL EXTENSION KIT

OPERATION MANUAL & SAFETY INSTRUCTIONS

MODELS: HPHSEK, 30130613

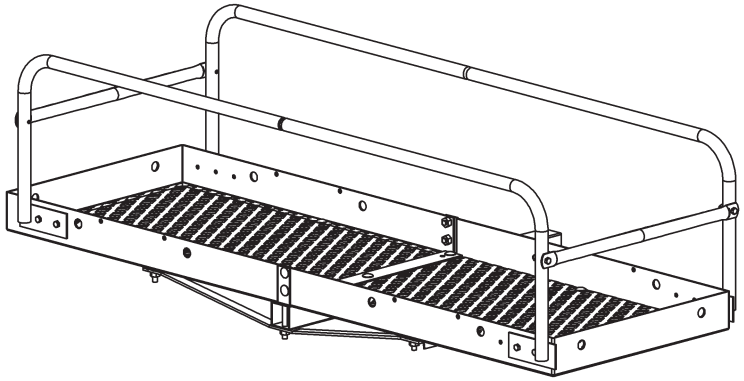

Tools needed for assembly: 2 Adjustable Wrenches

WARNING

- Never exceed receiver hitch manufacturer's tongue weight rating.
- The side rail is to be used as a stabilizing support only.
- All items **MUST** be tied down.
- Check all hardware connections before each use.

PARTS LIST

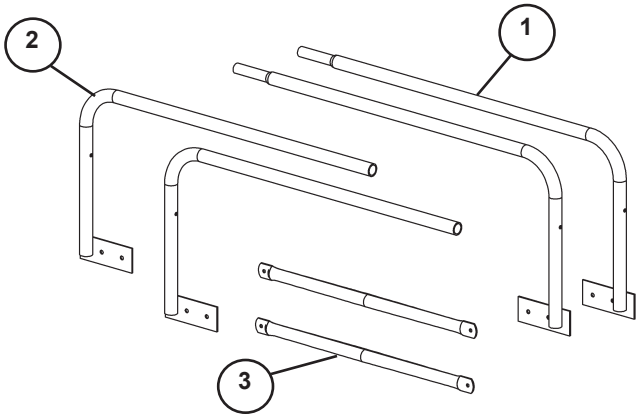

ITEM NO.	QTY	DESCRIPTION
1	2	Swedged Side Rails
2	2	Side Rails
3	2	Side Rail Braces

HARDWARE LIST

(A)
1/4x1 1/2”
Hexhead Bolt
Qty- 4

(B)
1/4x3/4”
Hexhead Bolt
Qty- 8

(C)
1/4”
Hex Lock Nut
Qty- 12

REPLACEMENT PARTS LIST

ITEM NO.	DESCRIPTION	ITEM NO.	DESCRIPTION
990060223	Swedged Side Rail Kit	998060015	Hardware Kit
990060224	Side Rail Kit	988060022	Instruction Manual
990060225	Side Rail Brace Kit		

STOP!

DO NOT RETURN TO RETAILER
For Assembly Assistance, Missing or Damaged Parts
Call: MASTERBUILT Customer Service at 1-800-489-1581.

LIMITED WARRANTY

MASTERBUILT Mfg., Inc. warrants all parts of this HITCH-HAUL® Side Rail Extension Kit product to be free from defects in material and workmanship for 90 days from date of purchase. Within this period, MASTERBUILT Mfg., Inc. shall correct any defect by repairing or replacing defective parts of the equipment, or making available parts thereof, FOB Columbus, GA.

MASTERBUILT Mfg., Inc. shall not be obligated to repair or replace equipment which has been repaired by others, abused, altered or misused. We further state that we shall not be held liable for any losses due to neglectful use on the part of the operator. Upon expiration of such warranty, all liability shall terminate. No other warranties are expressed or implied.

NOTE: Paint finish will scratch and chip under normal use, and therefore carries no warranty.

COMPLETE & RETURN TO

ATTN: WARRANTY REGISTRATION

Masterbuilt Outdoor Products

1 Masterbuilt Court, Columbus, GA 31907

Name: _____

Address: _____

City, State/Province, Postal Code: _____

Phone Number: _____ E-Mail Address: _____

Model Number: _____ Serial Number: _____

Purchase Date: _____ Place of Purchase: _____

HITCH-HAUL® Cargo Bag
Protect your valuable cargo from outdoor elements with the weather resistant design. Carry extra gear in oversized 58” x 18” x 18” bag. Secure to HITCH-HAUL® in seconds with unique, permanently attached tie-downs.

HITCH-HAUL® WIDE Cargo Carrier
Mounts to 2” receiver hitch. 22% larger than standard cargo carriers. Has 500lb load capacity and 12 tie down holes.

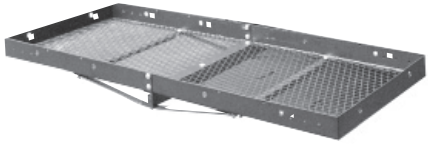

For more information about these and Masterbuilt’s entire product range, visit us @ ***www.masterbuilt.com***

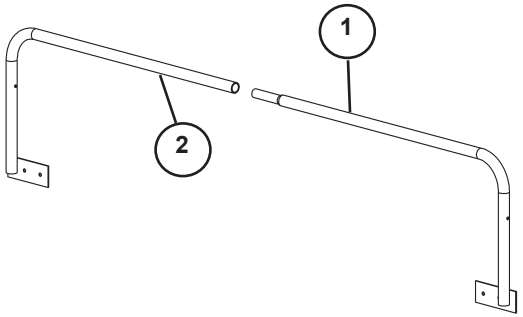

Step 1
Insert swedged end of swedged side rail (1) into side rail (2) as shown.

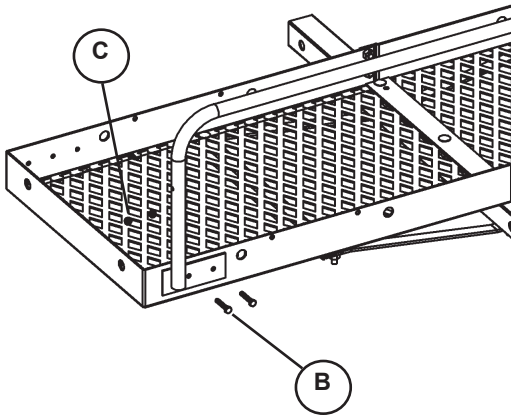

Step 2
Attached assembled side rails to HITCH-HAUL® platform using bolts (B) and hex lock nut (C).

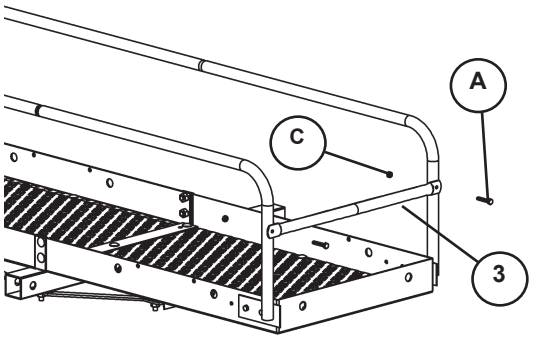

Step 3

Attach side rail brace (3) to mounted side rails using bolt (A) and hex lock nut (C).

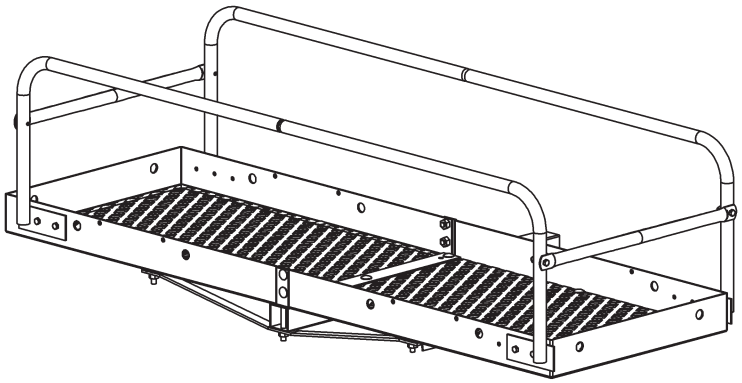

ASSEMBLY COMPLETE

Masterbuilt Automotive Accessories

Masterbuilt's range of Hitch-Haul® products can be accessorized to suit your own individual needs.

HITCH-HAUL® Web

This accessory will round out your Masterbuilt Hitch-Haul® for those camping, vacation or even short trips. Your load will be safe and secure during your journey.

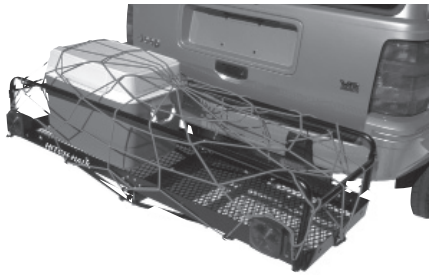

HITCH-HAUL® Folding Tow Bar

Class III tow bar with ball mount. Use to tow a trailer or boat and still have your Hitch-Haul® cargo carrier attached to your vehicle available to use.

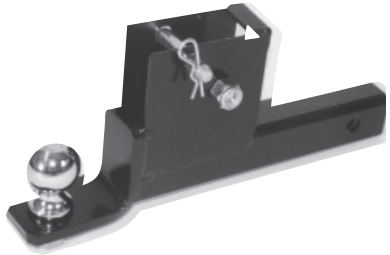

HITCH-HAUL® Motorcycle Carrier
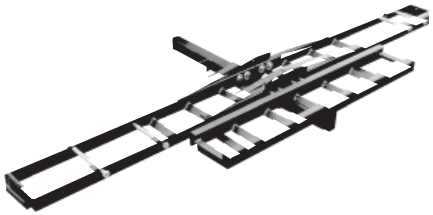
Mounts to 2" receiver hitch. Adjustable carrier fits up to a 450cc dirt bike. Adjustable to accommodate small to large bikes. Easy to use loading ramp stores on motorcycle carrier when not in use.